VIEWBOARD
IFP7552-1A

Key **Features**

- Singe-cable solution for touch, audio, video, and power via USB-C
- Angular design for elevated sound and ease-of-use during class
- Lag-free, pen-on-paper writing experience with Ultra Fine Touch Technology
- Blue light filter, True Flicker-Free and Zero-Bonding Technology for an increased visual experience
- Quad Core A73 CPU powered by Android9.0 OS



Product **Description**

The ViewBoard® 52 Series is a 4K Ultra HD interactive whiteboard equipped with user-centric design features and best-in-class collaboration tools for today's lessons made easy. With a single-cable solution for instant, worry-free connectivity and a unique angular design for easy access to shortcut keys and I/O ports, teachers can seamlessly connect and control for uninterrupted, flowing classes. Dual-pen capability, 33-point touch, Ultra Fine Touch and palm awareness technology combine for a naturally smooth writing experience and endless opportunities for student collaboration, supported by 2X15W front-facing speakers and a 15W subwoofer for amplified student engagement. In another industry-first feature of the display, teachers facilitating distance or hybrid learning from their personal device can easily access the 8-mic array and any connected visualizer to select the most appropriate camera and mic source. Complete with a browser-based remote management system, the ViewBoard 52 Series delivers a market-leading interactive whiteboard solution for teachers, students, and IT managers.

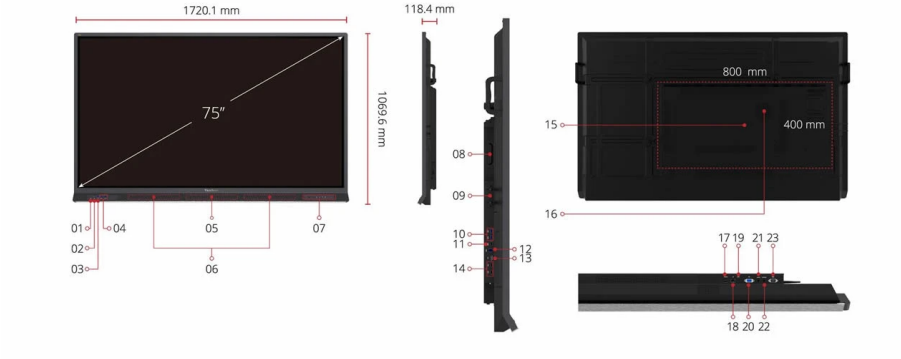

1. Type-C
2. HDMI In
3. Touch
4. USB 3.0 X 2
5. 8-Microphone Array
6. Front-Facing Speakers
7. Menu Controls
8. OPS Slot
9. Wi-Fi Module Slot
10. USB 3.0 X 2
11. USB 2.0
12. Touch
13. DP In
14. HDMI In X 2
15. VESA® Wall Mount 600 x 400mm
16. Subwoofer
17. HDMI Out
18. LAN
19. SPDIF
20. VGA
21. Audio In
22. Earphone
23. RS232

Visit Us www.viewsonic.com

DISPLAY

Panel Size:	75"
Panel Type:	TFT LCD Module with DLED Backlight.
Display Area (mm):	1649.644(H) x 927.936(V)
Aspect Ratio:	16:9
Resolution:	UHD 3840x2160(Pixels)
Colors:	1.07B colors (10bit)
Brightness:	400 nits (typ.)
Contrast Ratio:	1200:1 Typ. , 5000:1 Max.(DCR enable)
Response Time:	8ms
Viewing Angles:	H = 178, V = 178 typ.
Backlight Life:	50,000 Hours (Typ.)
Surface Treatment:	Hardness: 9H with Anti-Fingerprint coating & Anti-Glare coating

PLATFORM

Processor:	ARM Cortex A73*4
RAM:	4GB (IFP7552-1A), 8GB (IFP7552-1B)
Storage:	32GB (IFP7552-1A), 64GB (IFP7552-1B)

TOUCH

Type/ Tech:	UFT (Ultra Fine Touch) Technology
Touch Resolution:	32767 x 32767
Touch Point:	Windows: 33 points touch, Android: 20 points touch

INPUT

HDMI:	x2 (3840x2160@60Hz, HDCP2.2, CEC, Front x1, Side x1), x1 (3840x2160@60Hz, HDCP2.2, CEC, ARC, Side x 1)
RGB / VGA:	x1 (1920x1080 @60Hz)
DisplayPort:	x1 (3840x2160 @60Hz)
Audio:	x1 (PC audio in)
RS232:	x1
OPS:	module slot x 1
WiFi:	module slot x 1

OUTPUT

HDMI:	x1 (on demand)
Audio:	x1 (Earphone out)
SPDIF:	x1 (optical)

LAN

RJ45:	x1

USB

Type A:	USB 2.0 x1(Side x1), USB 3.0 x4 (Front x2, Side x2, SmartPort™ USB)
Type B:	x2, for touch
Type C:	x1 (USB3.0, DP1.2 Alt Mode, 100M Ethernet, 60W PD)

SPEAKERS

15W x 2 + 15W x 1 subwoofer

MICROPHONE

built-in 8-array microphone

TOP CAMERA PLATE

Yes

EMBEDDED OS

Android 9 (Android 11 upgradable)

BUNDLE SOFTWARE

Basic Annotation Software:	myViewBoard WhiteBoard for Android
Pro Annotation Software:	myViewBoard WhiteBoard for Windows (embedded in VPC)
Wireless Presentation:	ViewBoard Cast & myViewBoard Display

SPECIAL FEATURES

All-in-one USB port:	USB 3.0 x 4
Simple LAN sharing between IFP and slot-in device:	10/100/1000M for Android and PC
Light Sensor:	Yes

POWER

Voltage:	100-240VAC +/- 10% Wide Range
Consumption:	159.4W (Typ.) < 0.5 W (""Off"")

ERGONOMICS

Wall Mount (VESA®):	800 x 400

OPERATING CONDITIONS

Temperature (° C):	0°C to 40°C
Humidity:	20% ~ 80% RH Non-Condensing

DIMENSIONS (W X H X D)

Physical (inch / mm):	1720.1 (W) x 1069.6 (H) x 118.4 (D) mm, 67.72 (W) x 42.11 (H) x 4.66 (D) inch
Packaging (inch / mm):	1880 (W) x 1160 (H) x 280 (D) mm, 74.02 (W) x 45.67 (H) x 11.02 (D) inch

WEIGHT

Net (lb / kg):	125.22 lb / 56.8 kg
Gross (lb / kg):	158.95 lb / 72.1 kg

REGULATIONS

cTUVus, FCC, EPEAT, Mexico coc, Mexico Energy, RoHS, Energy Star 8, CEC, EMC/CE, CB, RoHS & DOC, REACH, WEEE, ErP. EEI, RCM, BIS, PSE, VCCI, CCC, CECP, BSMI

PACKAGE CONTENTS

1. Power cable(3 meters) 2. Remote control 3. USB Type-C cable (1.5 meters) 4. USB Touch cable (3 meters, USB2.0) 5. Touch pen x 2 6. Quick Start Guide + Compliance statement 7. RS232 adapter 8. Clamp x 5 9. Camera Plate 10. Screw x 8 (camera 2+2, wall mount 4) 11. HDMI cable (3 meters) 12. Eraser 13. 13. AAA Battery x 2

COMPATIBLE SLOT-IN PC

VPC12 & VPC25/27-O & VPC25/27-O-B series

Copyright © ViewSonic Corporation 2000-2023. All rights reserved.